Research Article | Vol. 24, No. 21 | 17 Oct 2016 | OPTICS EXPRESS 24083

Optics EXPRESS

DSP algorithms for recovering single-carrier Alamouti coded signals for PON applications

MD. SAIFUDDIN FARUK,[1,*] HADRIEN LOUCHET,[2] M. SEZER ERKILINÇ,[3] AND SEB J. SAVORY[1]

[1]*Electrical Engineering Division, Engineering Department, University of Cambridge, Cambridge CB3 OFA, UK*
[2]*VPIphotonics GmbH, Berlin 10587, Germany*
[3]*Department of Electronic and Electrical Engineering, UCL (University College London), London WC1E 7JE, UK*
[*]*msf35@cam.ac.uk*

Abstract: Alamouti space-time block code (STBC) combined with a simple heterodyne coherent receiver enables phase diverse coherent detection without any optical polarization tracking. While such a system consisting of only a 3-dB coupler and a single balanced photodiode has been recently demonstrated using orthogonal frequency-division multiplexed (OFDM) signals, herein we report the first application to single-carrier systems. Applicability of such technique for single-carrier systems is not straightforward since specialized digital signal processing (DSP) algorithms are required for data recovery. In this paper, we address the implementing issues and DSP algorithms applicable for single-carrier (SC) Alamouti STBC based simplified heterodyne receivers. Polarization-insensitive operation of the proposed scheme and its performance are verified by means of simulation for a 12-Gbits/s quadrature phase-shift keying (QPSK) transmission system.

OCIS codes: (060.2330) Fiber optics communications; (060.1660) Coherent communications; (060.2840) Heterodyne.

References and links

1. S. J. Savory, "Digital coherent optical access networks," in *IEEE Photonics Conference* (IEEE, 2013), pp. 125–126.
2. H. Rohde, E. Gottwald, A. Teixeira, J. D. Reis, A. Shahpari, K. Pulverer, and J. S. Wey, "Coherent ultra dense WDM technology for next generation optical metro and access networks," J. Lightwave Technol. **32**(10), 2041–2052 (2014).
3. D. Lavery, R. Maher, D. S. Millar, B. C. Thomsen, P. Bayvel, and S. J. Savory, "Digital coherent receivers for long-reach optical access networks," J. Lightwave Technol. **31**(4), 609–620 (2013).
4. C. Xie, P. J. Winzer, G. Raybon, A. H. Gnauck, B. Zhu, T. Geisler, and B. Edvold, "Colorless coherent receiver using 3x3 coupler hybrids and single-ended detection," Opt. Express **20**(2), 1164–1171 (2012).
5. J. Zhang, Z. Dong, J. Yu, N. Chi, L. Tao, X. Li, and Y. Shao, "Simplified coherent receiver with heterodyne detection of eight-channel 50 Gb/s PDM-QPSK WDM signal after 1040 km SMF-28 transmission," Opt. Lett. **37**(19), 4050–4052 (2012).
6. E. Ciaramella, "Polarization-independent receivers for low-cost coherent OOK systems," IEEE Photonics Technol. Lett. **26**(6), 548–551 (2014).
7. D. Pérez-Galacho, R. Halir, A. Ortega-Moñux, C. Alonso-Ramos, R. Zhang, P. Runge, K. Janiak, H.-G. Bach, A. G. Steffan, and Í. Molina-Fernández, "Integrated polarization beam splitter with relaxed fabrication tolerances," Opt. Express **21**(12), 14146–14151 (2013).
8. J. R. Barry and J. M. Kahn, "Carrier synchronization for homodyne and heterodyne detection of optical quadriphase-shift keying," J. Lightwave Technol. **10**(12), 1939–1951 (1992).
9. M. S. Erkılınç, D. Lavery, R. Maher, M. Paskov, B. C. Thomsen, P. Bayvel, R. I. Killey, and S. J. Savory, "Polarization-insensitive single balanced photodiode coherent receiver for passive optical networks," in *Proc. European Conf. Opt. Commun.* (ECOC, 2015), paper Th.1.3.3.
10. M. S. Erkılınç, D. Lavery, K. Shi, B. C. Thomsen, P. Bayvel, R. I. Killey, and S. J. Savory, "Polarization-insensitive single-balanced photodiode coherent receiver for long-reach WDM-PONs," J. Lightwave Technol. **34**(8), 2034–2041 (2016).

#272162 http://dx.doi.org/10.1364/OE.24.024083
Journal © 2016 Received 26 Jul 2016; revised 7 Sep 2016; accepted 9 Sep 2016; published 7 Oct 2016

Optics EXPRESS

11. S. M. Alamouti, "A simple transmit diversity technique for wireless communications," IEEE J. Sel. Areas Comm. **16**(8), 1451–1458 (1998).
12. S. J. Savory, "Digital filters for coherent optical receivers," Opt. Express **16**(2), 804–817 (2008).
13. Y. Mori, C. Zhang, and K. Kikuchi, "Novel configuration of finite-impulse-response filters tolerant to carrier-phase fluctuations in digital coherent optical receivers for higher-order quadrature amplitude modulation signals," Opt. Express **20**(24), 26236–26251 (2012).
14. K. Kikuchi, "Clock recovering characteristics of adaptive finite-impulse-response filters in digital coherent optical receivers," Opt. Express **19**(6), 5611–5619 (2011).
15. K. Kikuchi and S. Tsukamoto, "Evaluation of sensitivity of digital coherent receivers," J. Lightwave Technol. **26**(13), 1817–1822 (2008).

1. Introduction

Digital coherent receivers have caused a revolution in the design of optical core networks due to the ability of the linear field detection to facilitate digital mitigation of transmission impairments and the use of higher level modulation formats. They are also desirable for next generation access networks requiring gigabits per second data rate per user since they enable high receiver sensitivity and frequency selectivity [1–3]. Nevertheless, in access networks direct detection remains prevalent due to the stringent cost requirements.

A conventional polarization-diverse homodyne/intradyne coherent receiver which usually comprises of two polarization beam splitters (PBSs), two 90° optical hybrids and four balanced photodiodes as shown in Fig. 1(a). Several approaches have been demonstrated to simplify the optical front-end (and hence the cost) of such receivers [4–6]. A simpler coherent receiver is demonstrated using symmetric 3 × 3 couplers in conjunction with three single-ended photo-detectors instead of using 90° optical hybrids with two pairs of balanced detectors [4]. A further simplification can be made using heterodyne detection where 90° hybrids can be replaced by the 3-dB couplers and consequently halved the number of balanced photodiodes as shown in Fig. 1(b) [5]. However, use of PBSs makes the monolithic integration of a polarization-diverse coherent receiver challenging [7]. On the other hand, it is desirable to have an optical network unit (ONU) with a low-cost and compact footprint in access networks. By using the single-polarization (SP) heterodyne receiver as illustrated in Fig. 1(c), use of PBSs can be avoided with the front-end requiring only a 3-dB coupler and a single balanced photodiode [8]. However, one of the most serious problems of such simplified receiver is that the receiver sensitivity is dependent on the state of polarization (SOP) of the incoming signal. In the worst case where the SOP of the incoming signal is orthogonal to that of the local oscillator (LO), the receiver cannot detect the transmitted signal. In practical systems, the polarization of the incoming signal is unlikely to remain aligned to the SOP of the LO because of random changes on the birefringence of the transmission fiber. Therefore, in such receiver, SOP of the incoming signal needs to be tracked optically and should be aligned with the SOP of the LO laser to maintain the system performance which is impractical to do at ONU side. Recently, the polarization-insensitive operation of such receiver has been proposed by using the Alamouti space-time block code (STBC), eliminating the requirement of optical polarization controller at the receiver [9]. Being a half-rate coding, introducing Alamouti STBC costs a 3-dB sensitivity penalty compare to a polarization division multiplexed (PDM) system operating at same bit rate; however, the receiver is significantly simplified which is one of the key concerns in a passive optical network (PON) applications. This technique has been experimentally demonstrated using orthogonal frequency-division multiplexed (OFDM) signal transmission in a long-reach (LR) wavelength-division multiplexed (WDM) PON system [10].

Applying the Alamouti STBC to a single carrier (SC) transmission system is not trivial since conventional digital signal processing (DSP) algorithms are not applicable for such system. In this paper, we propose the suitable DSP algorithms including detail theoretical analysis for SC Alamouti STBC aided simplified heterodyne receiver. The system performance is investigated by means of intensive computer simulation for a 12-Gbits/s (considering10-Gbits/s/λ PON application including 20% FEC overhead) quadrature phase-

Optics EXPRESS

shift keying (QPSK) signal transmission over 100-km standard single-mode fiber (SMF). The polarization-insensitive operation of the simplified receiver is confirmed for any SOP of the incoming signal.

Rest of the paper is organized as follows: Sec. 2 provides the system description and related DSP algorithms for the SC Alamouti STBC signal recovery. The simulation results are described in Sec. 3. Finally, conclusions are drawn in Sec. 4.

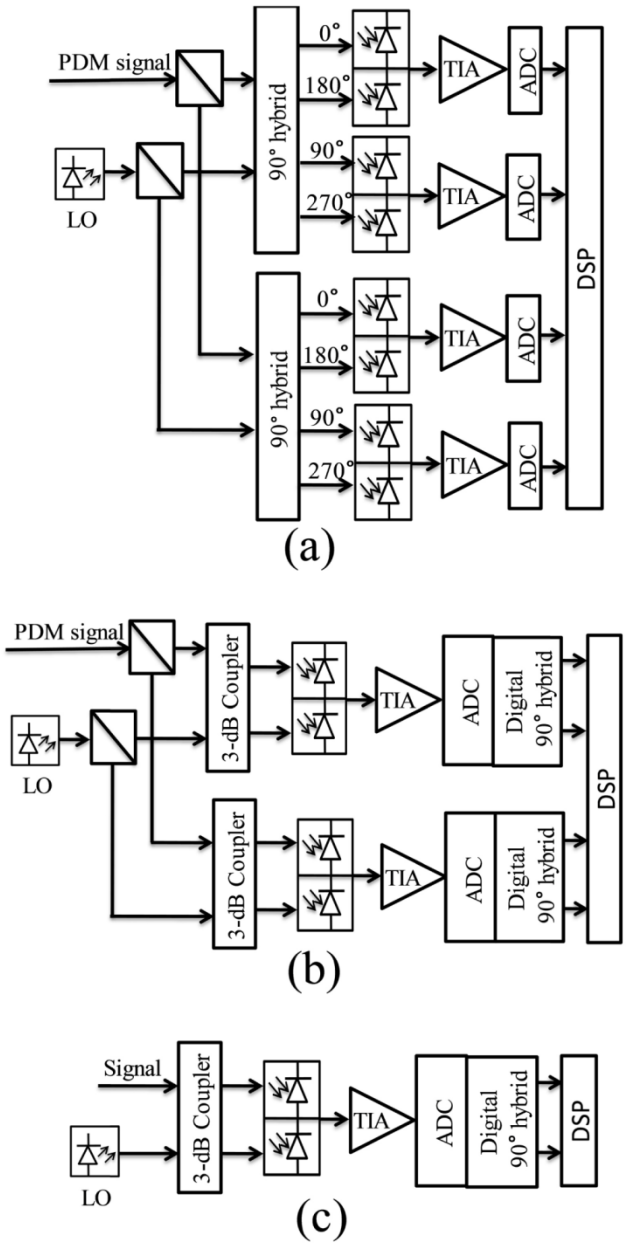

Fig. 1. Configurations of different digital coherent receivers. (a): polarization- and phase-diverse homodyne/intradyne detection, (b): polarization- and phase-diverse heterodyne detection, and (c): phase-diversity heterodyne detection. PDM: polarization-division multiplexed, LO: local oscillator, TIA: trans-impedance amplifier, ADC: analog-to-digital converter.

Optics EXPRESS

2. Single-carrier Alamouti STBC system with simplified receiver

2.1 System description

In a conventional PDM system, two independent data symbols are sent on *x*- and *y*-polarization modes. In contrast, in the case of Alamouti STBC, the symbols are grouped into pairs of time slots. In the first symbol period the symbols S_1 and S_2 are sent whereas in the next symbol period $-S_2^*$ and S_1^* are sent on *x*- and *y*- polarization modes, respectively; where * denotes the complex conjugate operation [11]. The coding sequence is illustrated in Fig. 2. Thus in two orthogonal polarization modes ($[E_x \quad E_y]$), two symbol-pairs $[S_1 \quad S_2]$ and $[-S_2^* \quad S_1^*]$ are transmitted which are orthogonal.

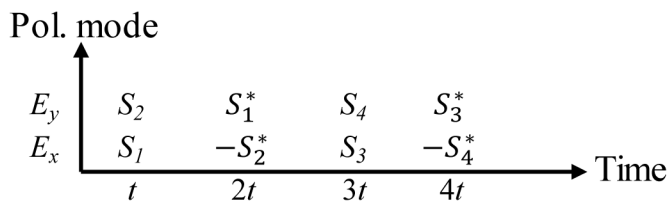

Fig. 2. Illustration of Alamouti coding in two polarization modes.

Now for simplicity of explanation, we consider only one pair of symbols is transmitted over a channel having transfer function $H = [h_{xx} \quad h_{xy}; h_{yx} \quad h_{yy}]$ representing the linear and noiseless response of the polarization effect. Since the proposed heterodyne receiver detects the signal in one of the polarizations, say *x*-polarization, the received symbols pair after digital 90° hybrid can be written as

$$S_1' = h_{xx} S_1 e^{j\theta_1} + h_{xy} S_2 e^{j\theta_1}, \tag{1a}$$

$$S_2' = -h_{xx} S_2^* e^{j\theta_2} + h_{xy} S_1^* e^{j\theta_2}. \tag{1b}$$

where, θ_1 and θ_2 are laser phase noise samples. Now if the second received symbol is conjugated and a reasonable approximation of $\theta_1 = \theta_2 = \theta$ is made, the received symbol pair can be rewritten in matrix form as

$$\begin{bmatrix} S_1' \\ S_2'^* \end{bmatrix} = \begin{bmatrix} h_{xx} e^{j\theta} & h_{xy} e^{j\theta} \\ h_{xy}^* e^{-j\theta} & -h_{xx}^* e^{-j\theta} \end{bmatrix} \begin{bmatrix} S_1 \\ S_2 \end{bmatrix}. \tag{2}$$

Using a zero-forcing criterion, Eq. (2) can be expressed as

$$\begin{bmatrix} S_1 \\ S_2 \end{bmatrix} = \begin{bmatrix} h_{xx} e^{j\theta} & h_{xy} e^{j\theta} \\ h_{xy}^* e^{-j\theta} & -h_{xx}^* e^{-j\theta} \end{bmatrix} \begin{bmatrix} S_1' \\ S_2'^* \end{bmatrix}. \tag{3}$$

The complementary nature of the elements of transfer matrix in Eq. (3) reveals that albeit a single polarization is detected, the system performance is independent of any polarization rotation.

2.2 Digital signal processing

As shown in Eq. (3), the conventional approach of the 2 × 2 MIMO equalizer followed by carrier phase estimation (CPE) [12] is not applicable in the case of SC Alamouti STBC system. This is because the contribution of phase noise from two MIMO inputs are not the same for a particular MIMO output due to conjugation of one symbol from a received symbol-pair. Therefore, we need a joint equalization and CPE approach which can be

Optics EXPRESS

achieved by the DSP circuit shown in Fig. 3. Here $\mathbf{w}_{ij}$ (ij = 11, 12, 21 or 22) are the coefficients vector of multi-tap finite-impulse-response (FIR) filters and p is a single-tap phase estimator and both are adapted by the least-mean-square (LMS) algorithm to satisfy the following condition:

$$\begin{bmatrix} \mathbf{w}_{11}p & \mathbf{w}_{12}p^* \\ \mathbf{w}_{21}p & \mathbf{w}_{22}p^* \end{bmatrix} \approx \begin{bmatrix} h_{xx}e^{j\theta} & h_{xy}e^{j\theta} \\ h_{xy}^*e^{-j\theta} & -h_{xx}^*e^{-j\theta} \end{bmatrix}^{-1}. \tag{4}$$

First, the received complex signal (output from digital 90° hybrid in Fig. 1(c)) is separated into even and odd symbols tributary u_o and u_e respectively and u_e is conjugated before fed into the 2 × 2 MIMO circuit to recover the original symbols as shown in Eq. (3). The outputs are given by

$$v_o(n) = \mathbf{w}_{11}^H\mathbf{u}_o p + \mathbf{w}_{12}^H\mathbf{u}_e^* p^*, \tag{5a}$$

$$v_e(n) = \mathbf{w}_{21}^H\mathbf{u}_o p + \mathbf{w}_{22}^H\mathbf{u}_e^* p^*. \tag{5b}$$

Then the error signal is calculated using the LMS algorithm as

$$e_{o/e} = d_{o/e} - v_{o/e}, \tag{6}$$

where $d_{o/e}$ is the training symbols at the start-up for initial convergence and decided symbols of v in the steady-state decision-directed (DD) mode.

Phase estimator can be updated from one of output ports, say from the odd port, and then the update equations can be written as

$$p_1 \leftarrow p_1 + \mu_p e_o u_{11}^*, \tag{7a}$$

$$p_2 \leftarrow p_2 + \mu_p e_o u_{12}^*, \tag{7b}$$

$$p = (p_1 + p_2^*)/2, \tag{7c}$$

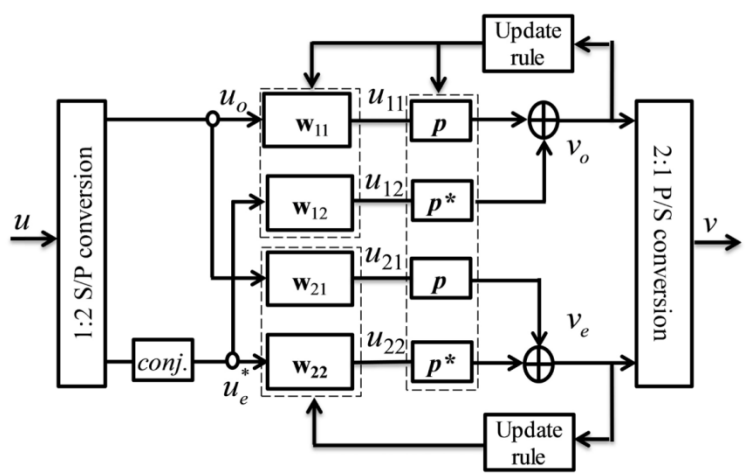

Fig. 3. DSP circuits for joint equalization, polarization tracking and carrier phase recovery for SC Alamouti STBC system. S/P: serial-to-parallel, P/S: parallel to serial, conj.: complex conjugate.

Optics EXPRESS

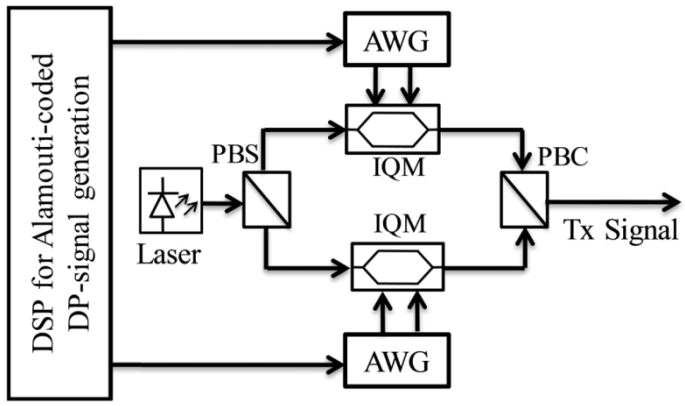

Fig. 4. Transmitter configuration of Alamouti STBC system. AWG: arbitrary waveform generator, IQM: IQ modulator, PBS: polarization beam splitter, PBC: polarization beam combiner, DSP: digital signal processing, DP: dual-polarization, Tx: transmitted.

where μ_p is the step-size parameter and u_{ij} is output from filter $\mathbf{w}_{ij}$. Averaging the estimated phase from two consecutive symbols as in Eq. (7c) enhances the phase noise tolerance of the proposed scheme. The tap coefficients of FIR filters are then updated phase-insensitively using the LMS algorithm with a convergence parameter μ as [13]:

$$\mathbf{w}_{11} \leftarrow \mathbf{w}_{11} + \frac{\mu|p|}{p} e_o \mathbf{u}_o^*, \tag{8a}$$

$$\mathbf{w}_{12} \leftarrow \mathbf{w}_{12} + \frac{\mu|p|}{p^*} e_o \mathbf{u}_e, \tag{8b}$$

$$\mathbf{w}_{21} \leftarrow \mathbf{w}_{21} + \frac{\mu|p|}{p} e_e \mathbf{u}_o^*, \tag{8c}$$

$$\mathbf{w}_{22} \leftarrow \mathbf{w}_{22} + \frac{\mu|p|}{p^*} e_e \mathbf{u}_e. \tag{8d}$$

3. Simulation results and discussion

To verify the principle of the proposed scheme, we conduct computer simulation for 12-Gbits/s QPSK transmission systems over 100-km of standard SMF. The SC Alamouti coded signal is generated by a DP transmitter configured as in Fig. 4. A pulse shaping filter having a root-raise cosine (RRC) profile with a roll-off factor of 0.1 is employed. The signal is then transmitted over the fiber whose transfer function is assumed to be as

$$H_f = e^{-j\omega^2\beta_2 z/2} \begin{bmatrix} \cos\theta & \sin\theta\exp(-i\phi) \\ -\sin\theta\exp(i\phi) & \cos\theta \end{bmatrix}, \tag{9}$$

where, ω is the angular frequency of the optical carrier, β_2 is the group-velocity dispersion (GVD) parameter, z is the fiber link length, and 2θ and ϕ are the azimuth and elevation rotation angles between two polarization states, respectively. Then additive white Gaussian noise (AWGN) is added and the signal is subsequently received by the simplified heterodyne receiver as shown in Fig. 1(c). For the heterodyne detection, the LO and transmitting laser differ by an intermediate frequency (IF), which must be greater than half of symbol rate. In the simulation, we choose an IF of 5 GHz which is used to down convert the detected signal to base band so that the complex amplitude is reconstructed. In practical systems, the IF value

Optics EXPRESS

can be estimated by using the pilot tones as in [10] or from the spectrum of electrically filtered IF signal as shown in [5]. Following the down conversion, the RRC matched filter is applied to the two-fold oversampled sequence and the proposed DSP operation shown in Fig. 3 is performed. The number of filter taps is chosen as 17 and the values of μ_p and μ are optimized that provide the best bit-error rate (BER). In the simulation, a total of 2×10^5 symbols are processed from which first 60×10^3 symbols are used for training which ensure sufficient convergence before switching to DD mode. Operating on two-fold oversampled sequences, the proposed equalizer performs the clock recovery [14]. Also, for 100-km SMF fiber, the small accumulated dispersion is compensated by the adaptive filters. Then the symbols are differentially decoded and BER is measured by direct counting method. Finally, Q^2-factor is calculated from the measured BER as $Q^2[\text{dB}] = 20\log_{10}\{\sqrt{2}erfc^{-1}(2BER)\}$.

To evaluate the tolerance of the proposed method to polarization changes over the entire Poincaré sphere, the parameters θ and ϕ in Eq. (9) are swept between -π/2 to + π/2. Figure 5 shows the Q^2-factor for such two-dimensional sweep. We include a 1-dB margin of signal-to-noise ratio (SNR) required for a BER of 1.5×10^{-2} (20% HD-FEC limit) and the laser phase noise corresponds to the combined linewidths symbol duration product ($\Delta\nu T_s$) of 1×10^{-4}. Such a high FEC is considered in this work to validate the robustness of proposed algorithm at low SNR. As shown in Fig. 5, the system performance is found very robust against any polarization rotation. The probability distribution function (PDF) is shown in Fig. 6 which is calculated from the measured Q^2-factor of 625 polarization states from the full Poincaré sphere. All the measurements successfully achieved a Q^2-factor above the FEC threshold.

The BER performance of the system is evaluated as a function of set SNR per polarization as shown in Fig. 7 for $\Delta\nu T_s = 1 \times 10^{-4}$. Note that, in the PON application, being an unrepeated transmission system, the noise mainly stems from shot noise and thus the SNR is directly related to received power [15]. The SNR penalty compared to the theoretical limit (with differential coding) is found to be around 0.5 dB at BER of 1.5×10^{-2}. In the theoretical limit calculation, the inherent 3-dB sensitivity degradation for heterodyne detection is considered [5].

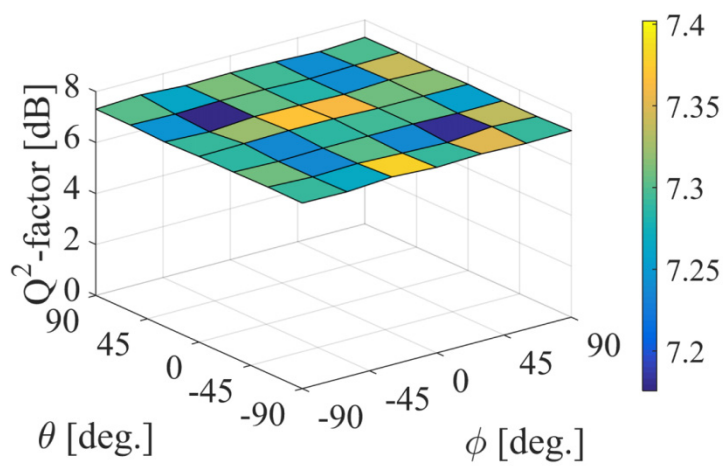

Fig. 5. Q^2-factor performance results for two-dimensional sweep of polarization states.

Optics EXPRESS

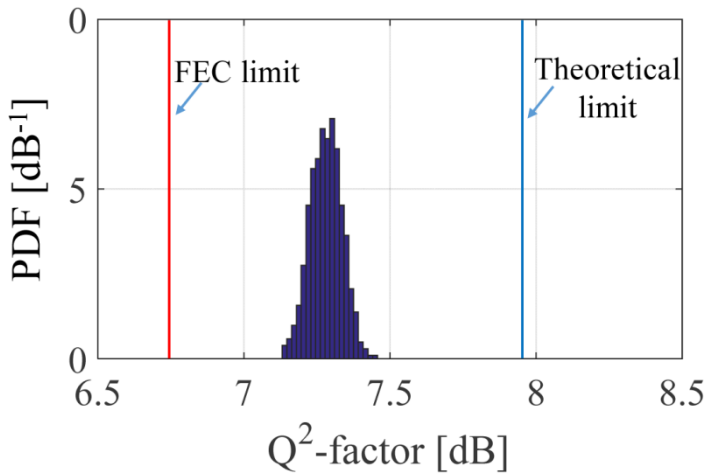

Fig. 6. Probability distribution function (PDF) of Q^2-factor from 625 polarization states over the full Poincaré sphere.

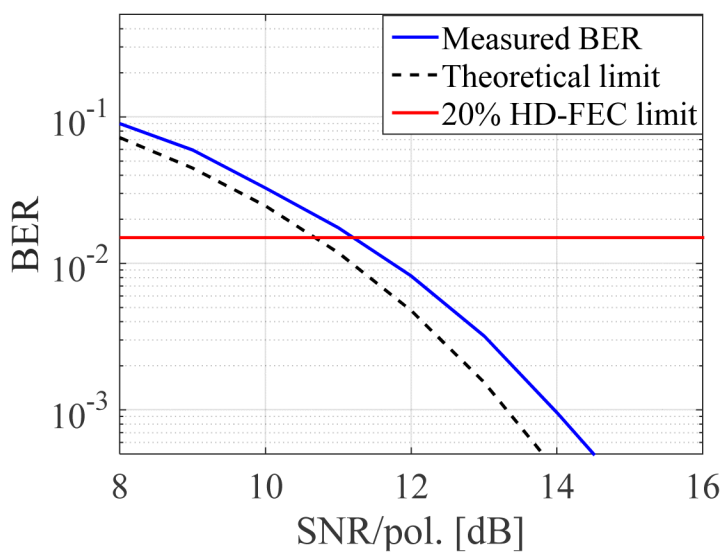

Fig. 7. The BER performance for the proposed system as a function SNR/pol.

Finally, we evaluate the phase noise tolerance of the proposed algorithm which is a crucial issue for Alamouti STBC systems. The measured SNR penalty at a BER of 1.5×10^{-2} as a function of $\Delta\nu T_s$ is shown in Fig. 8. For a penalty of less than 1-dB, the allowed $\Delta\nu T_s$ is found to be 3.3×10^{-4} which corresponds to 3-dB laser linewidth of 2 MHz at a symbol rate of 6 Gbaud. Therefore, a low-cost laser such as distributed feedback (DFB) laser (a typical linewidth of approximately 1 MHz) is feasible for the proposed system.

Optics EXPRESS

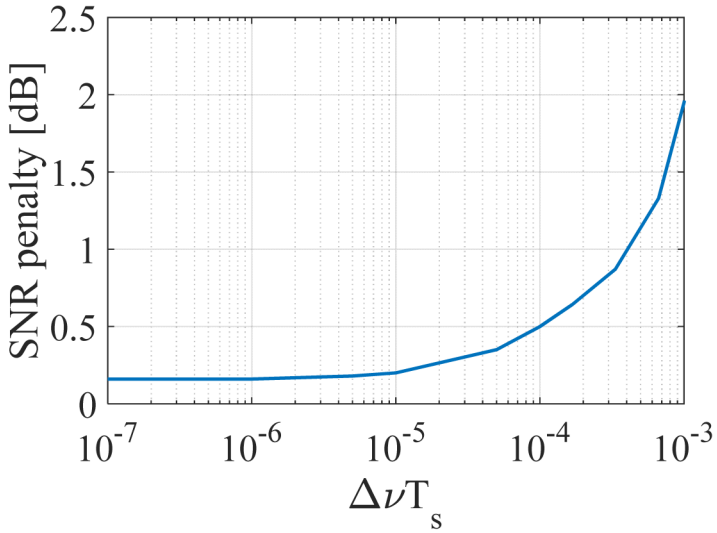

Fig. 8. SNR penalty at a BER of 1.5% versus combined laser linewidths symbol period product ($\Delta\nu T_s$).

4. Conclusion

We have investigated a low complexity, low-cost heterodyne receiver for its application in PON. The receiver front-end requires only a 3-dB coupler and a single balanced photodiode. To avoid any optical polarization tracking unit at the receiver front-end, SC Alamouti STBC is considered and suitable DSP algorithms for such system are developed.

The proposed system has been verified for 12-Gb/s QPSK transmission over 100-km standard SMF. System performance shows an excellent tolerance to the polarization changes. Moreover, by analyzing laser phase noise tolerance of the system, it is confirmed that a low-cost DFB laser can be used for the proposed scheme.

Funding

EU project ICONE (608099); EPSRC UNLOC (EP/J017582/1).